MPF PRODUCTS INC.

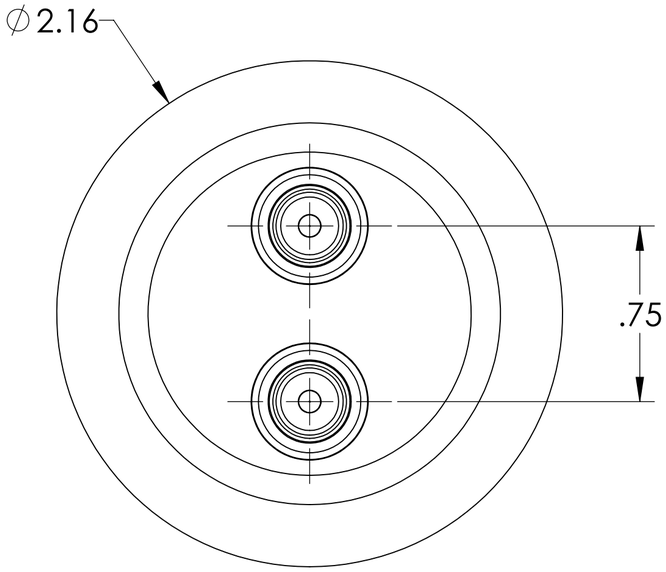

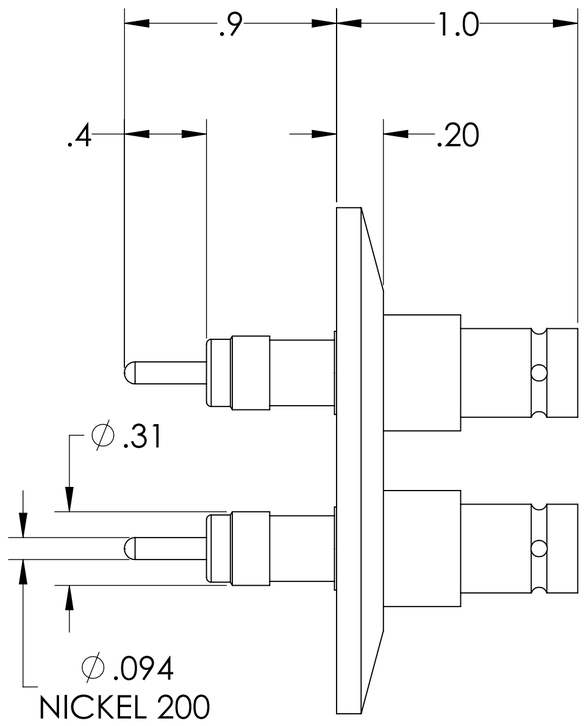

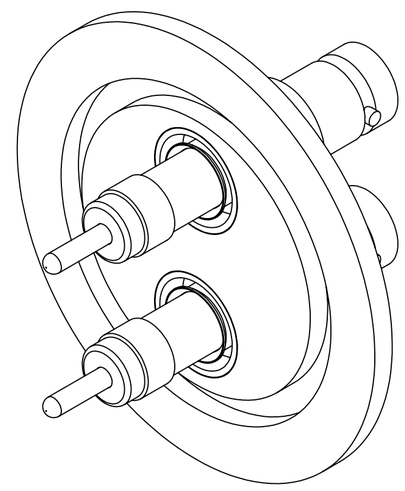

PART #	AIRSIDE CONNECTOR INCLUDED
A0347-1-QF	YES
A0347-2-QF	NO

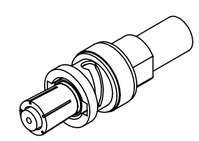

NOTE:
1. SHIELD: GROUNDED
2. VOLTAGE: 5000 VOLTS DC
3. CURRENT: 5 AMPS
4. TEMPERATURE RATING: -200 TO 450°C (FEEDTHROUGH), 65 TO 165°C (AIRSIDE CONNECTOR)
5. IMPEDANCE: NON-CONSTANT

SHV-5 Coaxial Feedthrough, 2 Pins, Grounded Shield, Exposed Insulator, 2.16" QF/KF, UHV Compatible

UNLESS OTHERWISE SPECIFIED:
DIMENSIONS ARE IN INCHES
TOLERANCES:
ANGULAR: MACH ± 1/2°
TWO PLACE DECIMAL ± .030
THREE PLACE DECIMAL ± .015
MATERIAL
FINISH
PLATING

QUOTATION # N/A

	NAME	DATE
DRAWN	WJ	9/11/2015
CHECKED		9/11/2015
ENG APPR.	WJ	9/11/2015

THIRD ANGLE:

APPLICATION
NEXT ASSY | USED ON

SURFACE FINISH: 63 OR BETTER

UNLESS OTHERWISE SPECIFIED:
ALL DIAMETERS CONCENTRIC WITHIN .005.
REMOVE ALL BURRS AND SHARP EDGES

MPF PRODUCTS INC.

TITLE:
SHV-5 COAXIAL FEEDTHROUGH, 2 PINS, GROUNDED SHIELD, EXPOSED, 2.16" QF/KF

DOWNLOADED FROM MPFPI.COM

DWG. NO. A0347 | REV

Thursday, January 17, 2019 3:28:23 PM

PROPRIETARY AND CONFIDENTIAL: THE INFORMATION CONTAINED IN THIS DRAWING IS THE SOLE PROPERTY OF MPF PRODUCTS INC. ANY REPRODUCTION IN PART OR AS A WHOLE WITHOUT THE WRITTEN PERMISSION OF MPF PRODUCTS INC. IS PROHIBITED.