MPF PRODUCTS INC.

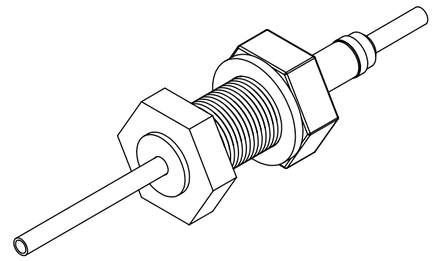

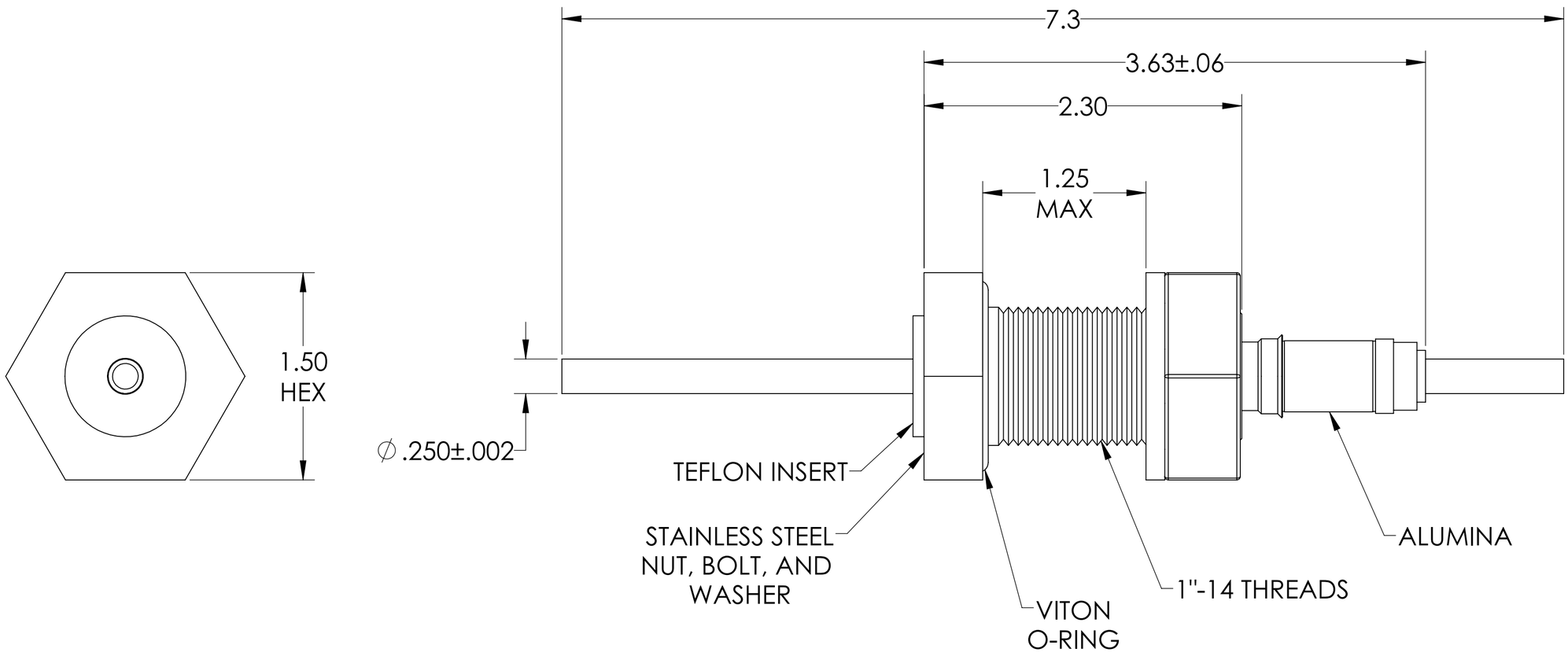

PART #	CONDUCTOR	CONDUCTOR MATERIAL	CURRENT RATING
A0543-1-BP	ROD	OFHC COPPER	180 AMPS
A0543-2-BP	ROD	NICKEL 200	55 AMPS
A0543-3-BP	ROD	304 STN STL	7 AMPS
A0543-4-BP	TUBE (.032 WALL)	OFHC COPPER	N/A

NOTE:
1. VOLTAGE: 5,000 VOLTS DC
2. CURRENT: SEE TABLE
3. TEMPERATURE RATING: -100 TO 450°C

Power Feedthrough, 5000 Volts, 1 Pin, 0.250" Conductor, 1" Baseplate Bolt, UHV Rated, Bakeable to 450°C

UNLESS OTHERWISE SPECIFIED:

DIMENSIONS ARE IN INCHES
TOLERANCES:

ANGULAR: MACH ± 1/2°
TWO PLACE DECIMAL ± .030
THREE PLACE DECIMAL ± .015

MATERIAL

FINISH

PLATING

QUOTATION # N/A

	NAME	DATE
DRAWN	WJ	9/11/2015
CHECKED		9/11/2015
ENG APPR.	WJ	9/11/2015

THIRD ANGLE:

APPLICATION

NEXT ASSY	USED ON

SURFACE FINISH: 63 OR BETTER

UNLESS OTHERWISE SPECIFIED:

ALL DIAMETERS CONCENTRIC WITHIN .005.
REMOVE ALL BURRS AND SHARP EDGES

MPF PRODUCTS INC.

TITLE:

POWER FEEDTHROUGH,
5000 VOLTS, 1 PIN,
1" BASEPLATE

DOWNLOADED FROM MPFPI.COM

DWG. NO. A0543 | REV

Tuesday, February 12, 2019 10:18:58 AM

PROPRIETARY AND CONFIDENTIAL: THE INFORMATION CONTAINED IN THIS DRAWING IS THE SOLE PROPERTY OF MPF PRODUCTS INC. ANY REPRODUCTION IN PART OR AS A WHOLE WITHOUT THE WRITTEN PERMISSION OF MPF PRODUCTS INC. IS PROHIBITED.