MPF PRODUCTS INC.

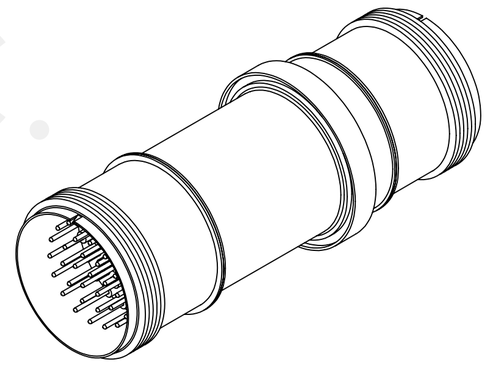

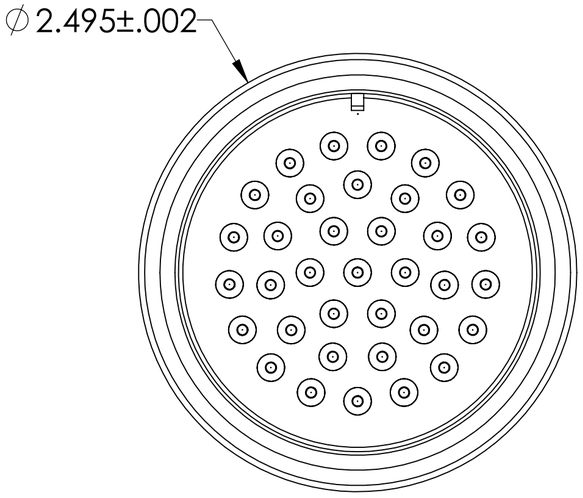

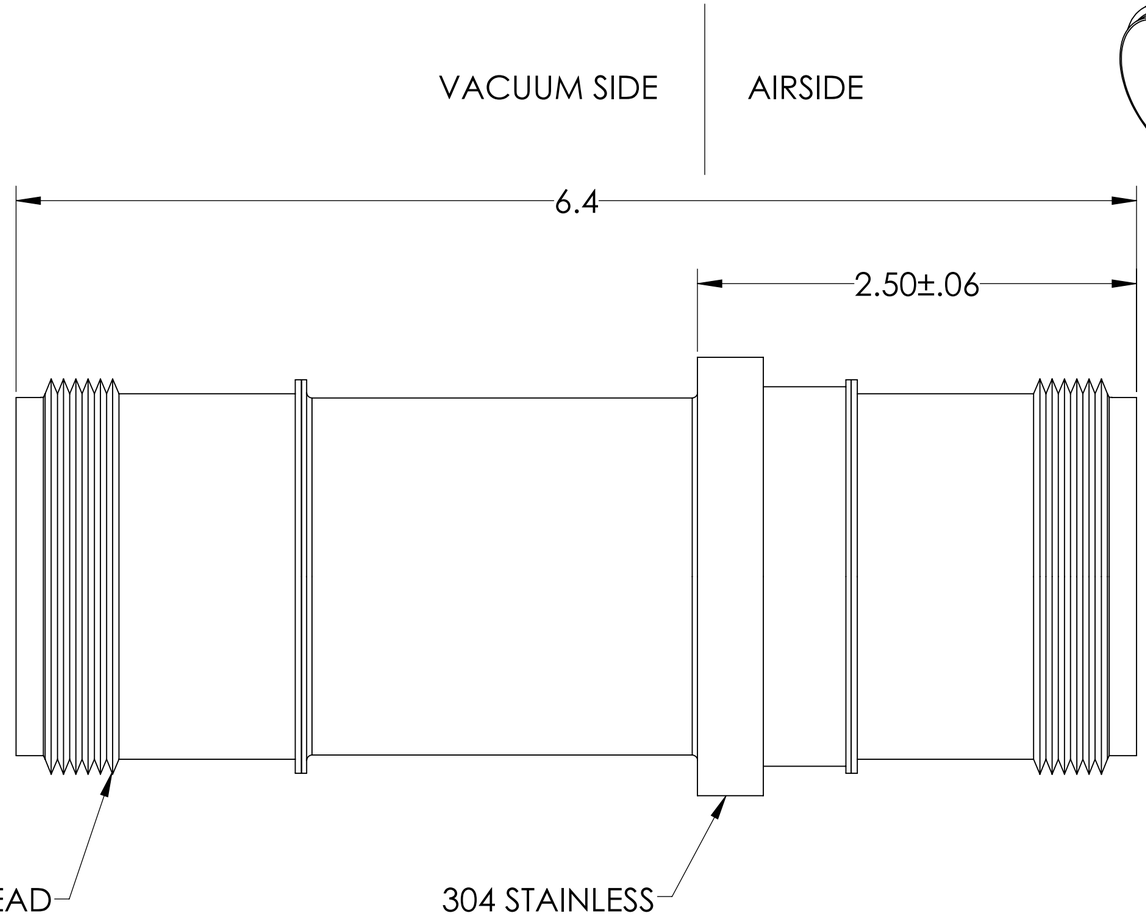

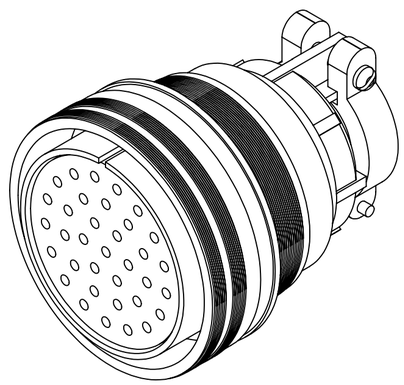

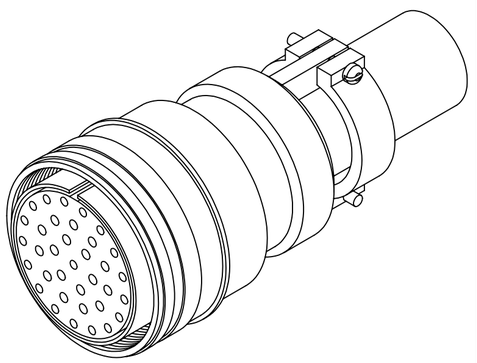

SPECIFICATIONS:

1. VOLTAGE: 700 VOLTS DC
2. CURRENT: 10 AMPS PER PIN, 100 AMPS FULL LOAD
3. TEMPERATURE RATING: -100 TO 450°C WITHOUT CONNECTOR
4. VACUUM SIDE CONNECTOR RATED FOR -100 TO 350°C
5. LEAK RATE < 1X10-9 ATM CC/SEC HE

MS Series, Multipin Feedthrough, 35 Pins, 700 Volts, 10 Amps per Pin, Double-Ended w/ Air & Vacuum-side Connectors, 2.495" Weld Adapter

UNLESS OTHERWISE SPECIFIED:	QUOTATION # N/A		
DIMENSIONS ARE IN INCHES TOLERANCES: ANGULAR: MACH ± 1/2° TWO PLACE DECIMAL ± .030 THREE PLACE DECIMAL ± .015		NAME	DATE
	DRAWN	WJ	9/11/2015
	CHECKED		9/11/2015
	ENG APPR.	WJ	9/11/2015
	THIRD ANGLE:		
MATERIAL	APPLICATION NEXT ASSY / USED ON		MPF PRODUCTS INC.
FINISH	SURFACE FINISH: 63 OR BETTER		TITLE: MULTIPIN, 35 PINS, 700V, 10 A, DOUBLE ENDED, 2.495" WELD ADAPTER
PLATING	UNLESS OTHERWISE SPECIFIED: ALL DIAMETERS CONCENTRIC WITHIN .005. REMOVE ALL BURRS AND SHARP EDGES		DOWNLOADED FROM MPFPI.COM DWG. NO. A1091-1-W REV Thursday, February 7, 2019 8:35:19 AM

PROPRIETARY AND CONFIDENTIAL: THE INFORMATION CONTAINED IN THIS DRAWING IS THE SOLE PROPERTY OF MPF PRODUCTS INC. ANY REPRODUCTION IN PART OR AS A WHOLE WITHOUT THE WRITTEN PERMISSION OF MPF PRODUCTS INC. IS PROHIBITED.