MPF PRODUCTS INC.

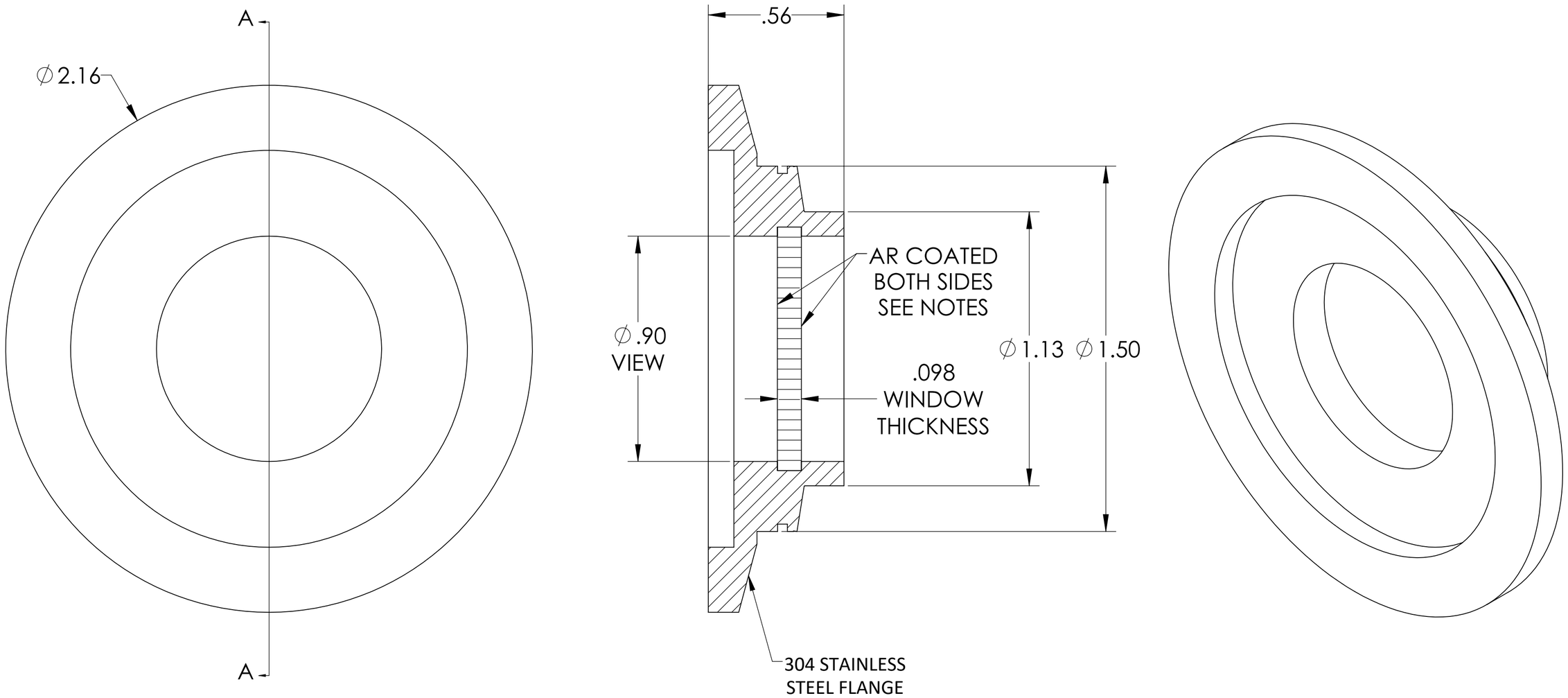


SPECIFICATIONS:

1. MATERIAL: ZINC SELENIDE
2. TWD < 1λ @ 632NM (PEAK TO VALLEY)
3. SURFACE FINISH: 40/20 SCRATCH-DIG
4. PARALLELISM < 3 ARC MINUTES
5. BBAR COATED BOTH SIDES 8-12microns,
6. THERMAL RANGE: -100°C TO 200°C
7. LEAK RATE < 1 X 10-9 ATM-CC/SEC HE

Zinc Selenide (ZnSe) Viewport w/ AR Coating for 8-12 microns, UHV Rated Vacuum-Optics, 0.90" View Dia., 2.16" QF/KF

| | | | |
|---|---|---|---|
| UNLESS OTHERWISE SPECIFIED: | QUOTATION # N/A | | |
| DIMENSIONS ARE IN INCHES<br>TOLERANCES:<br>ANGULAR: MACH ± 1/2°<br>TWO PLACE DECIMAL ± .030<br>THREE PLACE DECIMAL ± .015 | NAME / DATE<br>DRAWN: WJ 9/11/2015<br>CHECKED: 9/11/2015<br>ENG APPR.: WJ 9/11/2015<br>THIRD ANGLE: | MPF PRODUCTS INC. | |
| MATERIAL | APPLICATION<br>NEXT ASSY / USED ON | TITLE:<br>VIEWPORT, ZNSE<br>VACUUM OPTICS,<br>AR 8-12 MICRONS, 1"<br>VIEW, QF/KF 40 | |
| FINISH | SURFACE FINISH: 63 OR BETTER | DOWNLOADED FROM MPFPI.COM<br>DWG. NO. A8434-4-QF | REV |
| PLATING | UNLESS OTHERWISE SPECIFIED:<br>ALL DIAMETERS CONCENTRIC WITHIN .005.<br>REMOVE ALL BURRS AND SHARP EDGES | Thursday, July 11, 2019 11:46:53 AM | |

**PROPRIETARY AND CONFIDENTIAL:** THE INFORMATION CONTAINED IN THIS DRAWING IS THE SOLE PROPERTY OF MPF PRODUCTS INC. ANY REPRODUCTION IN PART OR AS A WHOLE WITHOUT THE WRITTEN PERMISSION OF MPF PRODUCTS INC. IS PROHIBITED.