PART # A5802-1-CF	REV.	SHEET 1 OF 1

MPF PRODUCTS INC.

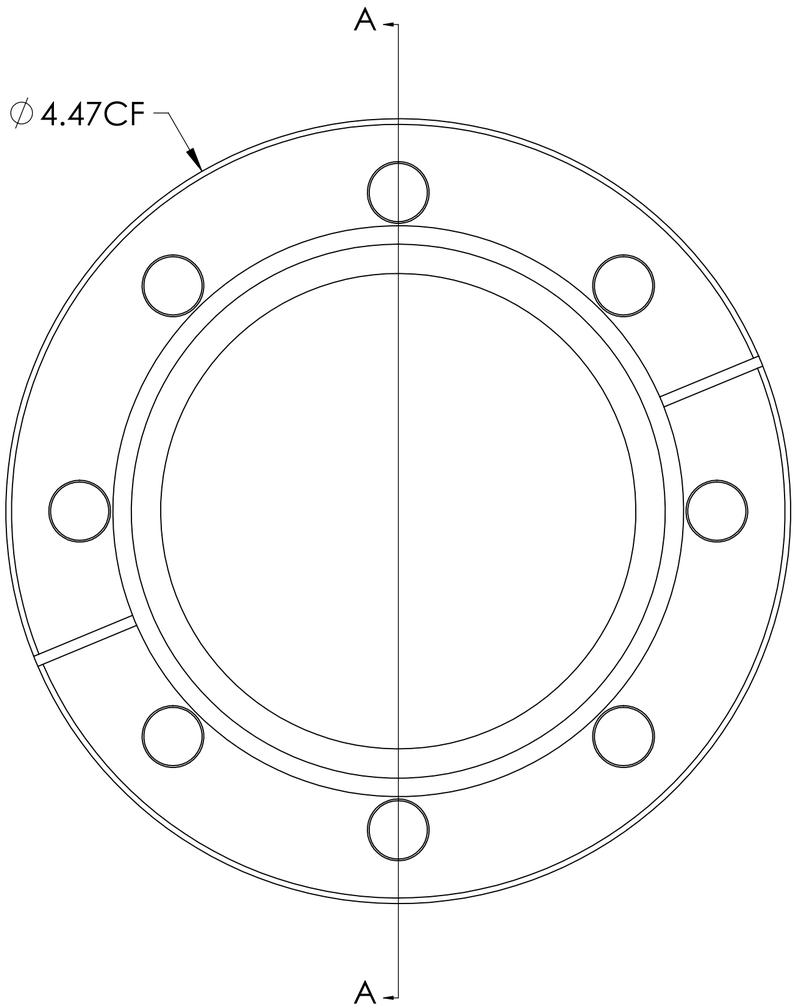

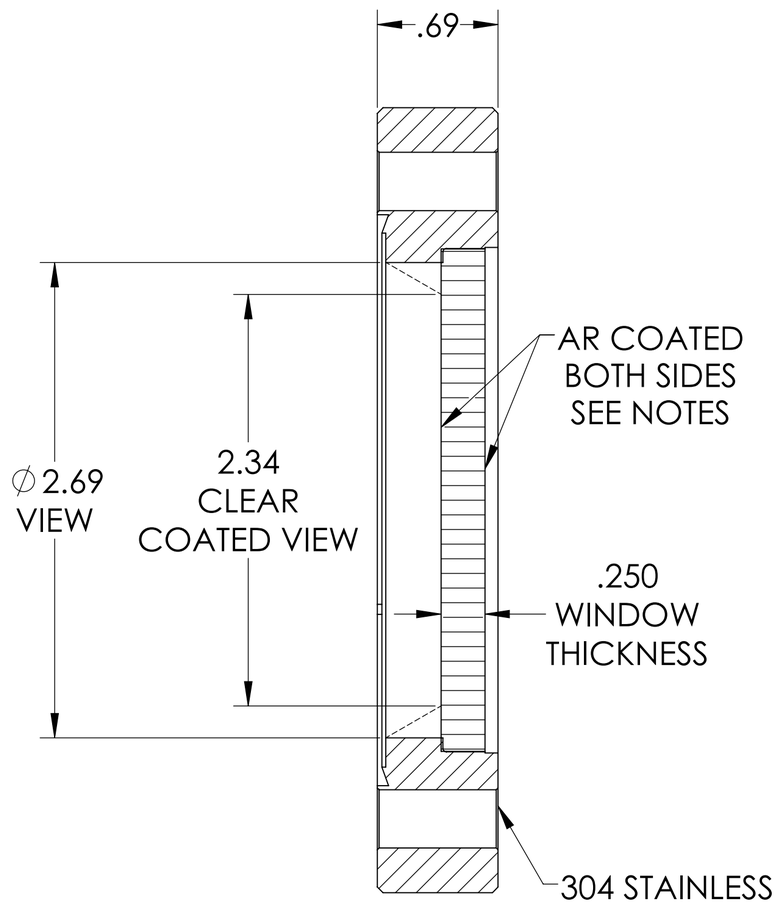

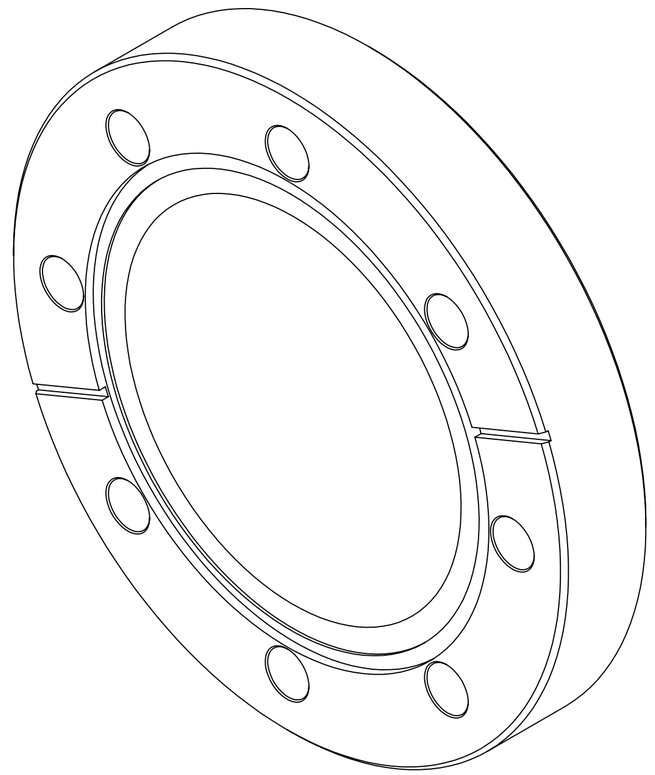

SPECIFICATIONS:

1. MATERIAL: CORNING HPFS 7980 OR EQUIVALENT
2. TWD < λ/4 @ 632NM (PEAK TO VALLEY)
3. PARALLELISM < 10 ARC SECONDS
4. SURFACE FINISH: 20/10 SCRATCH-DIG
5. THERMAL RANGE: -100°C TO 200°C
6. HOMOGENEITY GRADE: A
7. INCLUSION CLASS: 0
8. AR COAT BOTH SIDES 780NM, RAVG. <0.25% PER SURFACE
9. LASER DAMAGE THRESHOLD: 10J/CM2 FOR 10 NS PULSE
10. LEAK RATE < 1 X 10-9 ATM-CC/SEC HE

Laser Grade Fused Silica Viewport w/ AR Coating for 780nm, 2.69" View Dia, 4.50" Conflat Flange

UNLESS OTHERWISE SPECIFIED:	QUOTATION # N/A		
DIMENSIONS ARE IN INCHES TOLERANCES: ANGULAR: MACH ± 1/2° TWO PLACE DECIMAL ± .030 THREE PLACE DECIMAL ± .015		NAME	DATE
	DRAWN	WJ	9/11/2015
	CHECKED		9/11/2015
	ENG APPR.	WJ	9/11/2015
	THIRD ANGLE:		
MATERIAL	APPLICATION NEXT ASSY / USED ON		
FINISH	SURFACE FINISH: 63 OR BETTER		
PLATING	UNLESS OTHERWISE SPECIFIED: ALL DIAMETERS CONCENTRIC WITHIN .005. REMOVE ALL BURRS AND SHARP EDGES		

MPF PRODUCTS INC.

TITLE:

VIEWPORT, FUSED SILICA, LASER GRADE, AR COATING 780nm, 2.7" VIEW, 450CF

DOWNLOADED FROM MPFPI.COM

DWG. NO. A5802-1-CF | REV

Friday, January 25, 2019 3:50:01 PM

PROPRIETARY AND CONFIDENTIAL: THE INFORMATION CONTAINED IN THIS DRAWING IS THE SOLE PROPERTY OF MPF PRODUCTS INC. ANY REPRODUCTION IN PART OR AS A WHOLE WITHOUT THE WRITTEN PERMISSION OF MPF PRODUCTS INC. IS PROHIBITED.