MPF PRODUCTS INC.

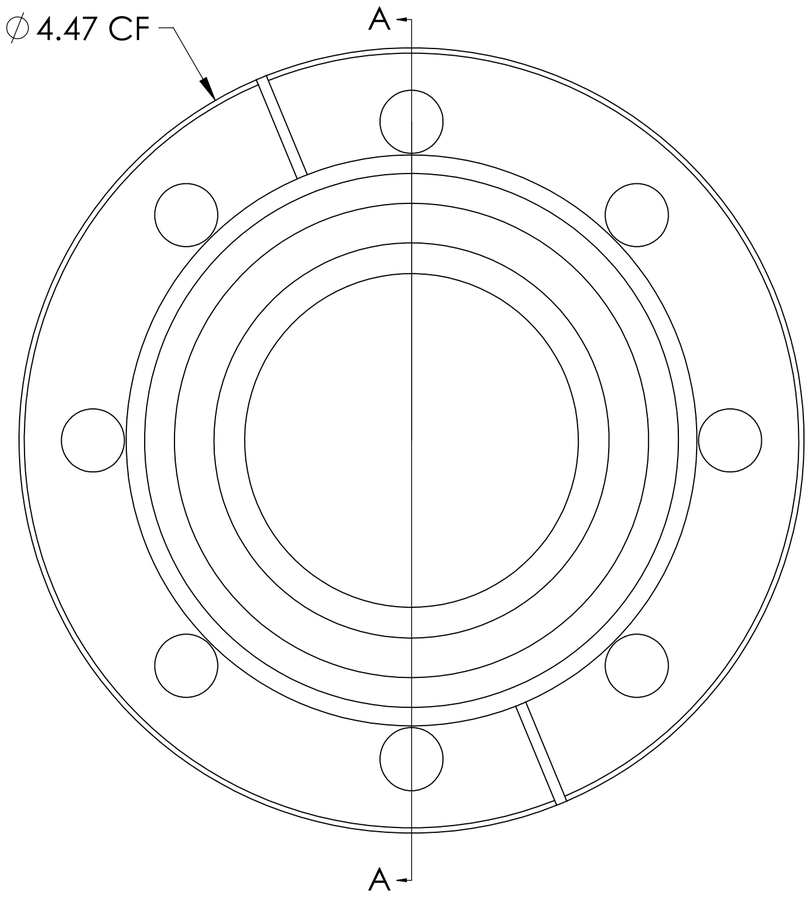


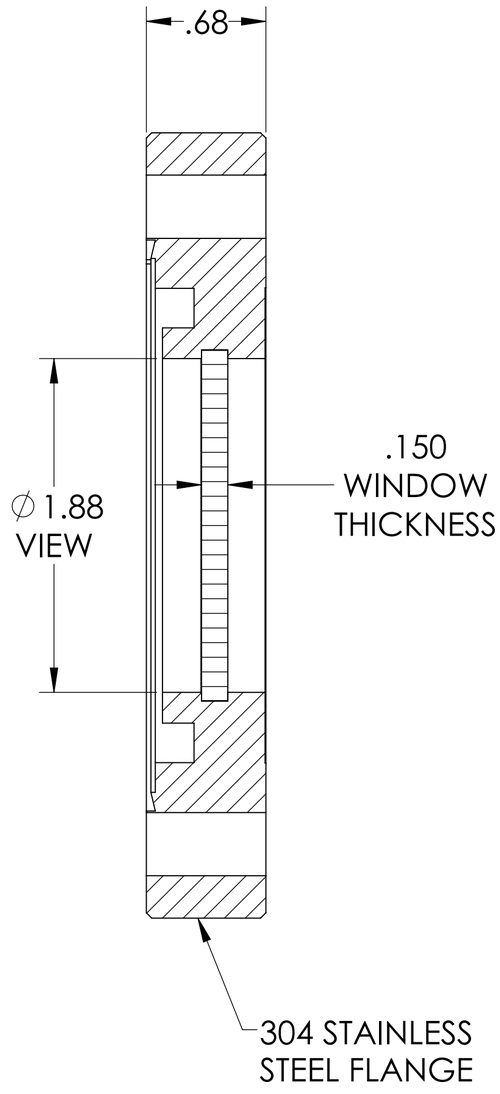


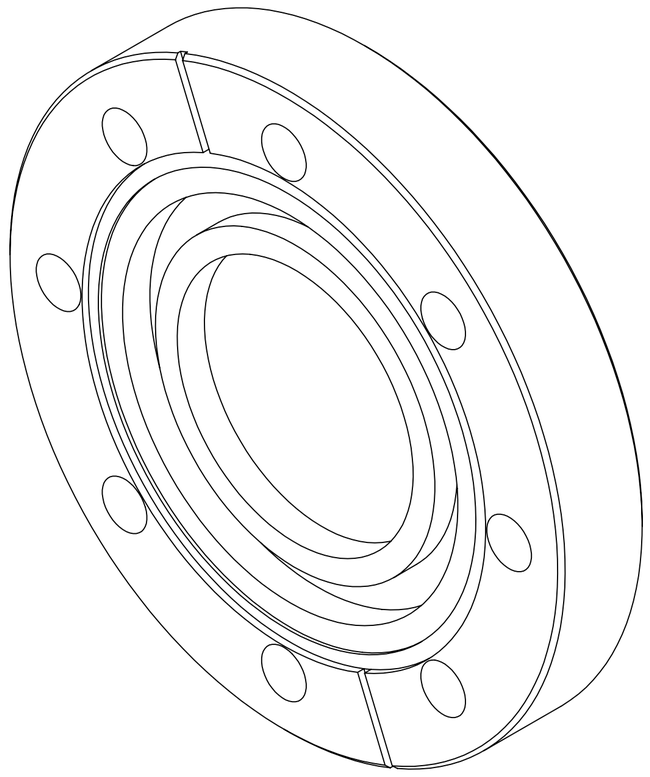

SPECIFICATIONS:

1. MATERIAL: SINGLE CRYSTAL, 0° MAGNESIUM FLUORIDE
2. TWD < λ/2 @ 632NM (PEAK TO VALLEY)
3. PARALLELISM < 3 ARC MINUTES
4. SURFACE FINISH: 20/10 SCRATCH-DIG
5. THERMAL RANGE: -100°C TO 200°C
6. LEAK RATE < 1 X 10-9 ATM-CC/SEC HE

Magnesium Fluoride (MgF2) Viewport, UHV Rated Vacuum-Optics, 1.88" View Dia, 4.50" Conflat Flange

| | | | |
|---|---|---|---|
| UNLESS OTHERWISE SPECIFIED: | QUOTATION # N/A | | |
| DIMENSIONS ARE IN INCHES<br>TOLERANCES:<br><br>ANGULAR: MACH ± 1/2°<br>TWO PLACE DECIMAL ± .030<br>THREE PLACE DECIMAL ± .015 | | NAME | DATE |
| | DRAWN | WJ | 9/11/2015 |
| | CHECKED | | 9/11/2015 |
| | ENG APPR. | WJ | 9/11/2015 |
| | THIRD ANGLE: | | |
| MATERIAL | APPLICATION<br>NEXT ASSY / USED ON | | |
| FINISH | SURFACE FINISH: 63 OR BETTER | | |
| PLATING | UNLESS OTHERWISE SPECIFIED:<br>ALL DIAMETERS CONCENTRIC WITHIN .005.<br>REMOVE ALL BURRS AND SHARP EDGES | | |

MPF PRODUCTS INC.

TITLE:

VIEWPORT, MGF2
VACUUM OPTICS,
2" VIEW, 450CF

DOWNLOADED FROM MPFPI.COM

DWG. NO. A4595-1-CF | REV

Wednesday, October 14, 2020 11:12:25 AM

**PROPRIETARY AND CONFIDENTIAL:** THE INFORMATION CONTAINED IN THIS DRAWING IS THE SOLE PROPERTY OF MPF PRODUCTS INC. ANY REPRODUCTION IN PART OR AS A WHOLE WITHOUT THE WRITTEN PERMISSION OF MPF PRODUCTS INC. IS PROHIBITED.